ALL INFORMATION CONTAINED OR DISCLOSED BY THIS DOCUMENT IS CONSIDERED CONFIDENTIAL AND PROPRIETARY BY SELLI ELECTRONICS CO,LTD. ALL DESIGN, MANUFACTURING, USE, REPRODUCTION, AND ALL SALES RIGHTS, ARE EXPRESSLY RESERVED BY AND TO SELLI ELECTRONICS CO,LTD. AND COMMUNICATION OF THIS INFORMATION TO OTHERS IS PROHIBITED WITHOUT THE PRIOR WRITTEN CONSENT OF SELLI

DRAWING REVISIONS

REV	S/N	DESCRIPTION	APPROVED	DATE
A	20080210-09	ORIGINAL RELEASE		

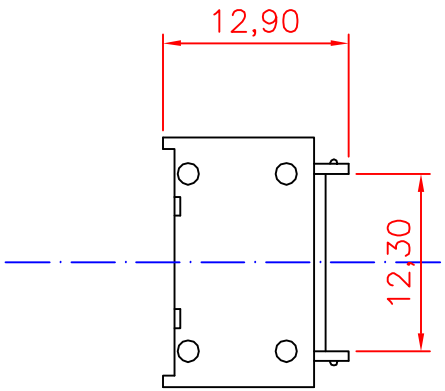

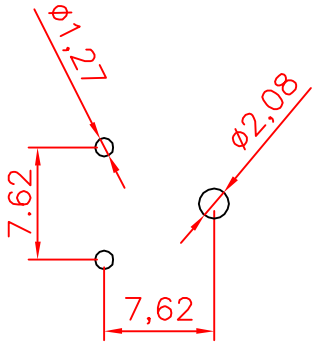

mounting pattern

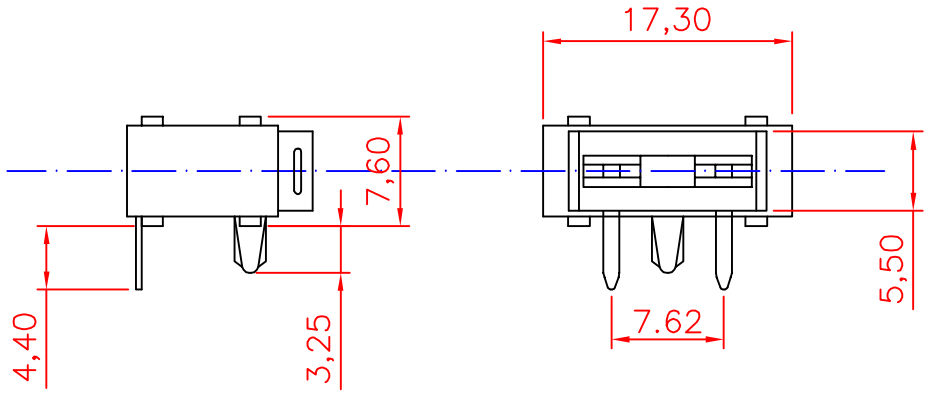

NOTES: UNLESS OTHERWISE SPECIFIED.

1. Applicable: For MINI blade fuse. to 15A32VAC
2. Electrical: Rated for current up
3. Insulating Base body: PA +30%GP
   Contact: Brass with Tin plated

东莞市赛力特电子有限公司
SELITTEL ELECTRONIC CO., LTD

RoHS COMPLIANT

UNLESS OTHERWISE STATED

WALL THICKNESS		MM
LINEAR	.XX	± 0.15 MM
	.XXX	± 0.05 MM
ANGULAR		± 0.5 DEG
DRAFT ANGLE/SIDE		0.5 ° MAX
BURR & FLASH		0.10 MAX
BREAK CORNERS		0.20 R.MAX
PARTING LINE MISMATCH		0.05 MAX

PCB Mount Fuseholder
FOR MINI AUTO FUSE

CUSTOMER

DSGN	Tom	12-22-08	SCALE	free
DFTS	TOM	12-22-08	SHEET	1 OF 1
CHKD			PART NO.	SL-1537
APPD			REV	A